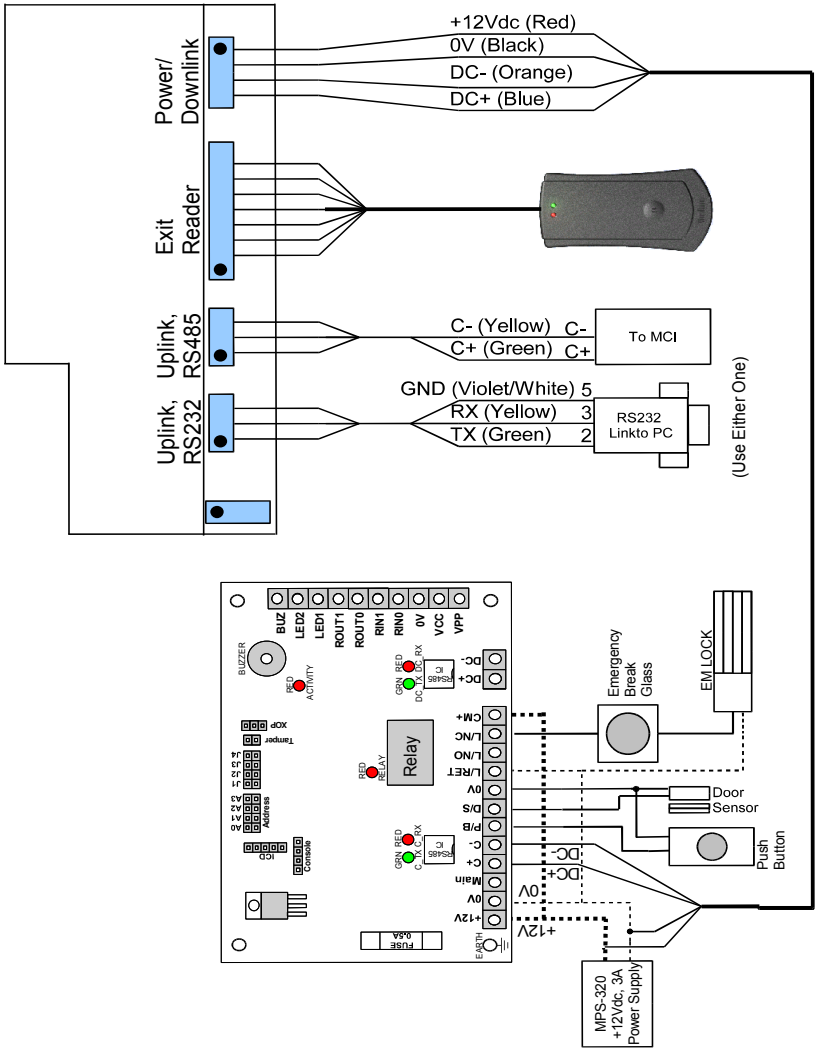Appendix 1 – General Wiring for XP-GT using MAS-RBT